VS TECHNOLOGY
MACHINE VISION OPTICS

DESIGNED FOR TRUST

VS-THV1-110CO/S-SWIR

C-mount Telecentric Lens

- **Optimized for 1” Short Wave Infrared Cameras**
- **700nm-2000nm >60% Transmission**
- **Coaxial Optimized for SWIR**
- **Excellent Resolution**

Optical Specifications		
Optical Mag.		1.0X +/- 5%
Working Distance		111.1mm
O/I		259.6mm
Working F/#		10.5
NA		0.048
DOF at PCoC ø 0.04mm		0.8mm
TV Distortion (1”)		0.02%
Relative Illuminance (Y=8)		98%
Wavelength		SWIR
Resolution	Center	>120lp/mm
	Corner	>120lp/mm

Mechanical Specifications	
Mount	C-Mount
Flange Back	17.526mm
Sensor Size (max)	1”
Co-Axial Prism	Built-in
Filter Thread	M30.5 P=0.5
Weight	128g
Dimension	ø32(max) x L 131mm
Operating Temp.	-10C +55C
Field of View (VxH)	
1”	11.3 x 11.3 mm
2/3”	7.1 x 8.4 mm
1/2"	4.8 x 6.4 mm

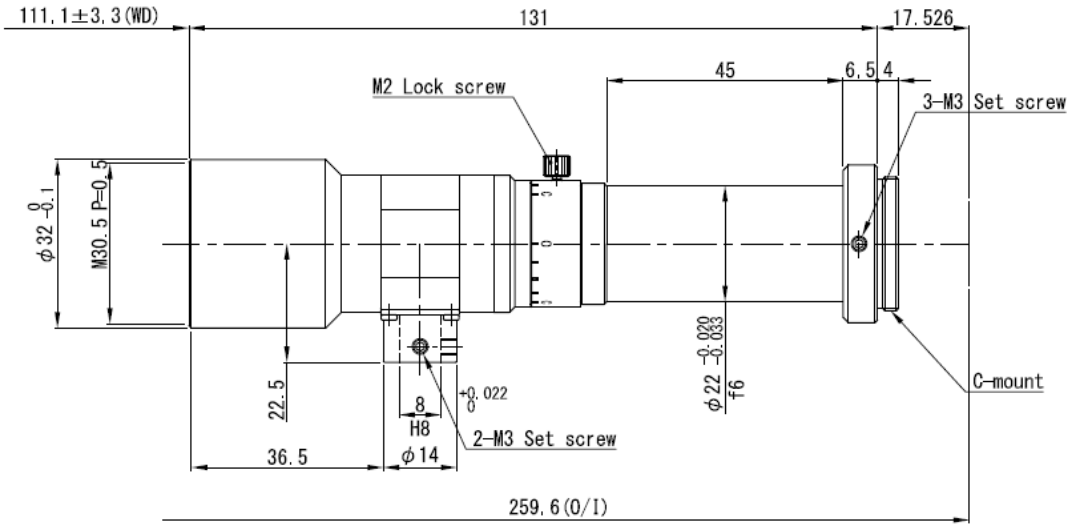

VS Technology Corporation
1-9-19 Azabudai, Minato-ku,
Tokyo 106-0041 Japan

www.vst.co.jp

RoHS compliant