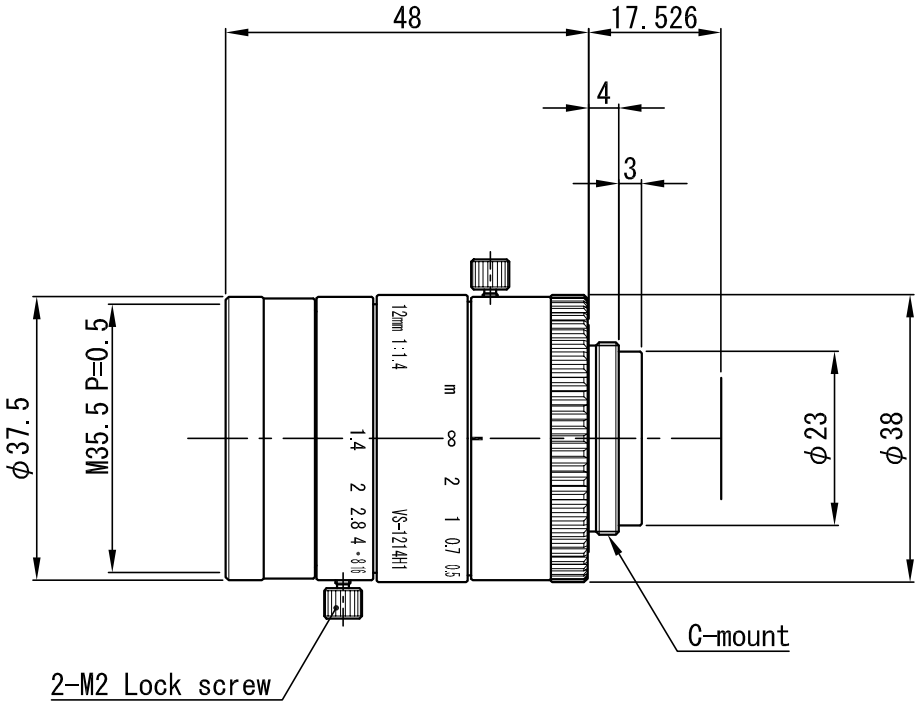

				APPROVED	CHECKED	MATERIAL 材料	–	CHAMFER 一般面取	–	QUANTITY 個数
△				T.A.	T.A.	TREATMENT 処理	–	FINISHING 仕上	–	–
△						TREATMENT CONTACT 処理接点	–	DECENTRATION 偏芯	–	
△				DESIGNED	DRAWN	OVER 250 UP TO 1000 ±0.3 ±0.5 ±1.0 ±0.2	UNIT(mm)	ANGLE 角度	METHOD 図法	REMARK 適用（機種名）
△				T.A.	T.T.	OVER 63 UP TO 250 ±0.2 ±0.3 ±0.6 ±0.15		–		VS-1214H1
△						OVER 16 UP TO 63 ±0.1 ±0.2 ±0.4 ±0.1	SCALE	1 / 1	NAME	外観図
	DATE	EXCH NO.	REVISION 変更記事			OVER 0 UP TO 16 ±0.05 ±0.1 ±0.2 ±0.1	DATE	'13.01.30	DRAW NO.	ODSV0134A1
						TOLERANCES A B C S				