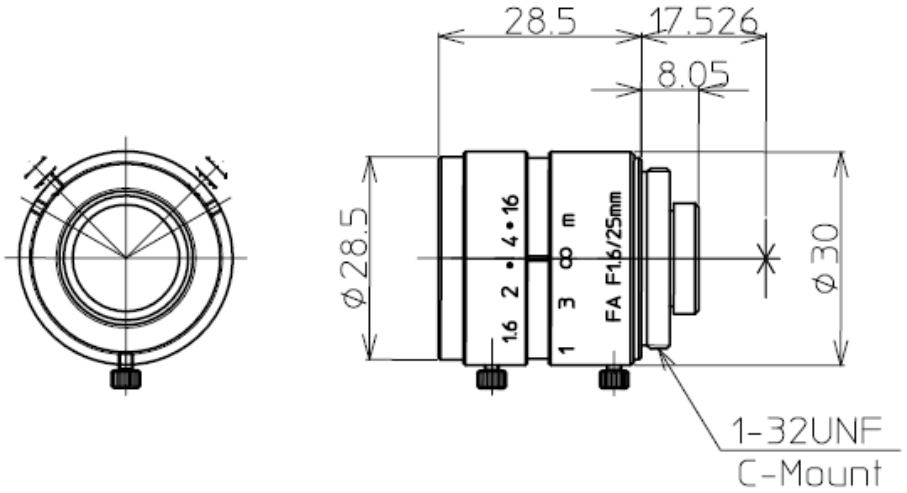

2/3" 1.6/25mm C		1/2"	1/3"
FOCAL LENGTH	f=25mm		
MAX. DIAMETER (RATIO)	F=1:1.6~16		
ELEMENT	5Gr 5 Element		
PICTURE SIZE	6.6x8.8mm	4.8x6.4	3.6x4.8
ANGLE VER. ANGLE	15.7°	11.4°	8.6°
HOR. ANGLE	21.0°	15.3°	11.5°
DIA. ANGLE	26.3°	19.1°	14.3°
DISTORTION	-0.6%	-0.2%	-0.1%
SHOOTING RANGE AT MINIMUM FOCUS DISTANCE VER.	275mm	199.0mm	149.1mm
HOR.	368mm	266.0mm	199.0mm
DIA.	465mm	334.0mm	249.2mm
MINIMUM FOCUS DISTANCE	0.2m		
FLANGE BACK	17.526 mm in air		
BACK FOCUS	10.32mm in air		
FILTER SCREW SIZE	M27x0.5		
FRONT/REAR EFFECTIVE DIA.	Front Ø14.6mm	Rear Ø10.7mm	
MOUNT	C-MOUNT		
EXIT PUPIL	-26.2mm		
TEMPERATURE RANGE	-10~+45° C		
STORAGE TEMPERATURE RANGE	-40~+60° C		
RESOLUTION CENTER/CORNER	Center 100LP/mm	Corner 60LP/mm	

		LM25JC		
		2/3" 1.6/25mm		