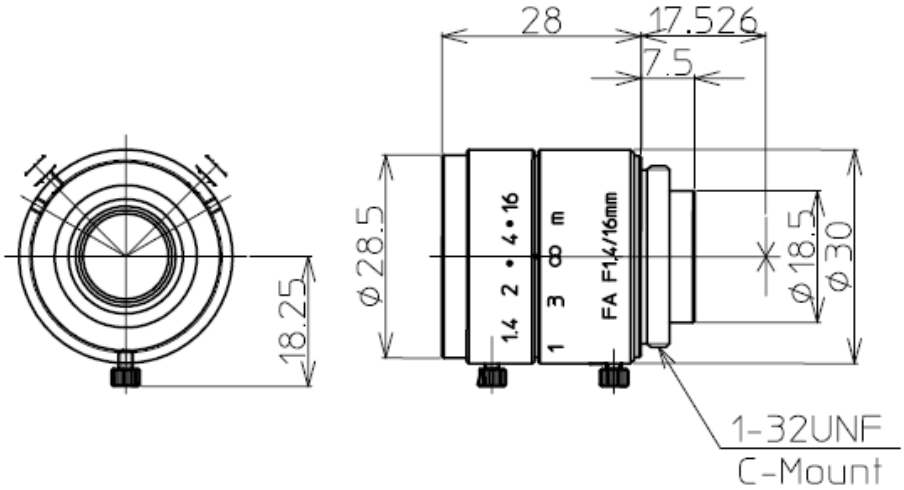

2/3" 1.4/16mm C		1/2"	1/3"
FOCAL LENGTH	f=16mm		
MAX. DIAMETER (RATIO)	F=1:1.4~16		
ELEMENT	6Gr 6 Element		
PICTURE SIZE	6.6x8.8mm	4.8x6.4	3.6x4.8
ANGLE VER. ANGLE	22.8°	16.6°	12.4°
HOR. ANGLE	30.5°	22.2°	16.6°
DIA. ANGLE	38.3°	27.7°	20.8°
DISTORTION	-1.5%	-0.8%	-0.4%
SHOOTING RANGE AT VER.	82.6mm	59.6mm	44.5mm
MINIMUM FOCUS HOR.	111.8mm	80.1mm	59.6mm
DISTANCE DIA.	142.5mm	101.1mm	74.9mm
MINIMUM FOCUS DISTANCE	0.2m		
FLANGE BACK	17.526 mm in air		
BACK FOCUS	12.15mm in air		
FILTER SCREW SIZE	M27x0.5		
FRONT/REAR EFFECTIVE DIA.	Front Ø12.0mm Rear Ø12.8mm		
MOUNT	C-MOUNT		
EXIT PUPIL	-48.9mm		
TEMPERATURE RANGE	-10~+45° C		
STORAGE TEMPERATURE RANGE	-40~+60° C		
RESOLUTION CENTER/CORNER	Center 100LP/mm Corner 60LP/mm		

		LM16JC		
		2/3" 1.4/16mm		