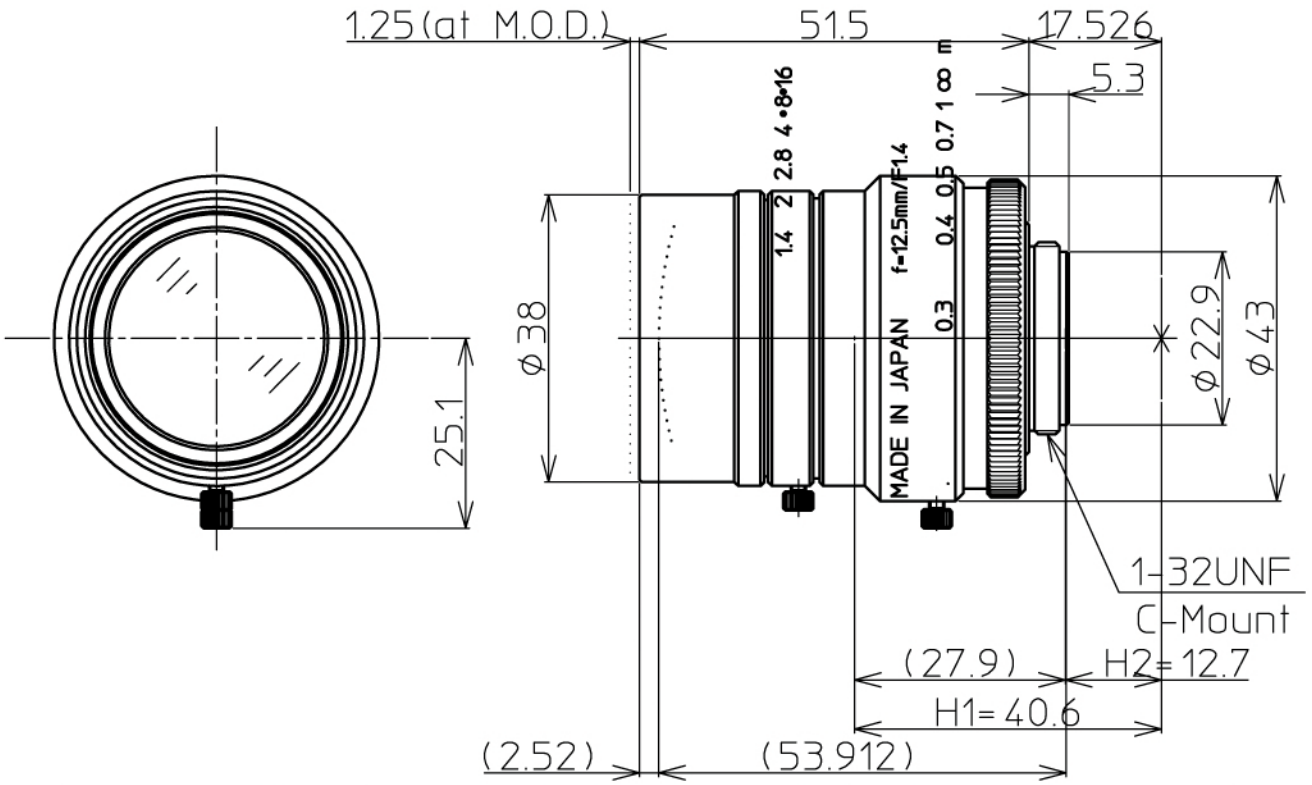

1" 1.4/12.5mm		2/3"	1/2"
FOCAL LENGTH	f=12.5mm		
MAX. DIAMETER (RATIO)	F=1:1.4~16		
PICTURE SIZE	12.8x9.6mm	8.8x6.6	6.4x4.8
ANGLE VER. ANGLE	42.5°	29.5°	21.6°
HOR. ANGLE	55.6°	39.1°	28.7°
DIA. ANGLE	67.7°	48.3°	35.7°
DISTORTION (TV)	-1.58%	-1%	-0.6%
MINIMUM FOCUS DISTANCE	0.3m		
FLANGE BACK	17.526mm in air		
BACK FOCUS	12.6mm in air		
FILTER SCREW SIZE	M35.5x0.5		
FRONT/REAR EFFECTIVE DIA.	Front φ28.1mm Rear φ17.5mm		
MOUNT	C-MOUNT		
EXIT PUPIL	-45.9mm		
TEMPERATURE RANGE	-10~+50° C		
STORAGE TEMPERATURE RANGE	-20~+60° C		
RESOLUTION	Center 120lp/mm Corner 80lp/mm		
WEIGHT	150g		

Kowa

2011.06.07

LM12HC

1" F1.4 f=12.5mm