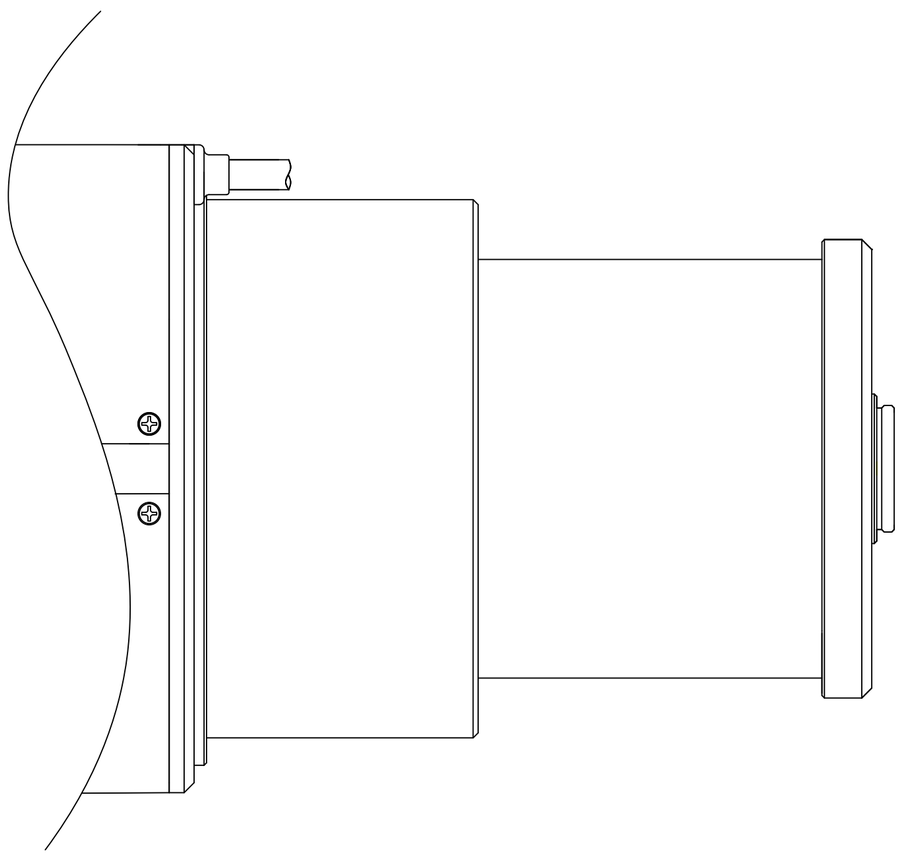

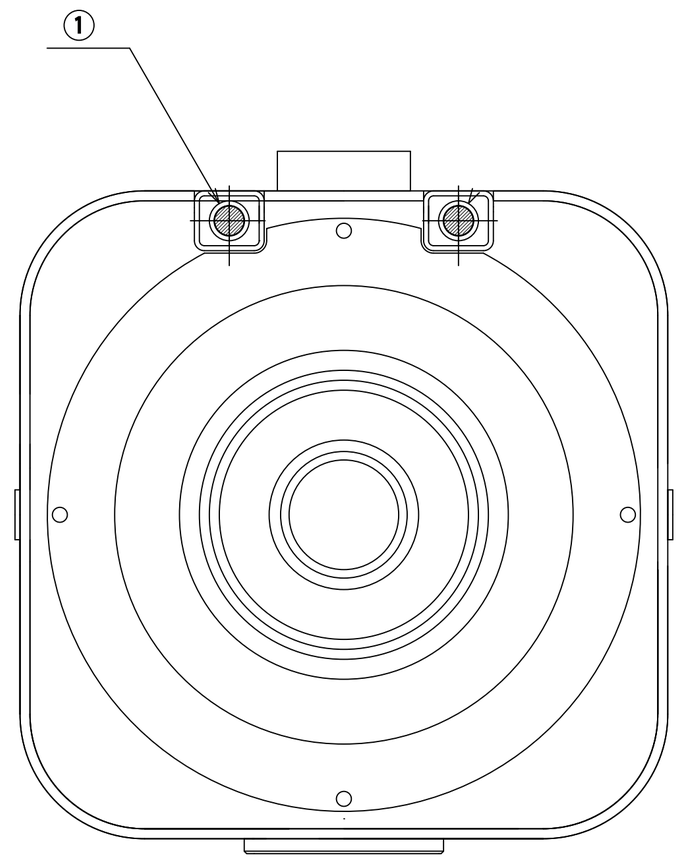

LMZ2200AMPDC-XF

1 MOTOR & POT. CABLE (FOCUS, ZOOM, EXTENDER)

(+)	GREEN	FOCUS NEAR
(+)	BLACK	FOCUS FAR
(+)	YELLOW	ZOOM IN
(+)	RED	ZOOM OUT
(+)	WHITE	EXT ON
(+)	BROWN	EXT OFF
(+)	ORANGE	POT. SUPPLY
	BLUE	FOCUS WIPER
(-)	PURPLE	POT. RETURN
	GRAY	ZOOM WIPER
(+)	Light Green	POT. SUPPLY
	Pink	EXT WIPER
(-)	Light Blue	POT. RETURN

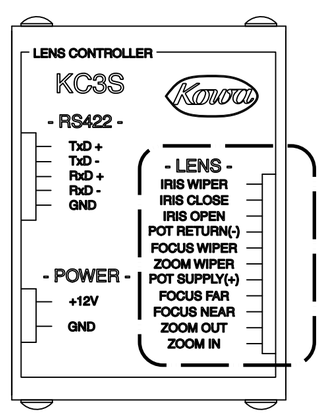

KC3S SIDE	LMZ2200AMPDC-XF		
IRIS WIPER		Pink	EXT WIPER
IRIS CLOSE	(+)	BROWN	EXT OFF
IRIS OPEN	(+)	WHITE	EXT ON
POT RETURN(-)	(-)	PURPLE & Light Blue	POT. RETURN
FOCUS WIPER		BLUE	FOCUS WIPER
ZOOM WIPER		GRAY	ZOOM WIPER
POT RETURN(+)	(+)	ORANGE & Light Green	POT. SUPPLY
FOCUS FAR	(+)	BLACK	FOCUS FAR
FOCUS NEAR	(+)	GREEN	FOCUS NEAR
ZOOM OUT	(+)	RED	ZOOM OUT
ZOOM IN	(+)	YELLOW	ZOOM IN

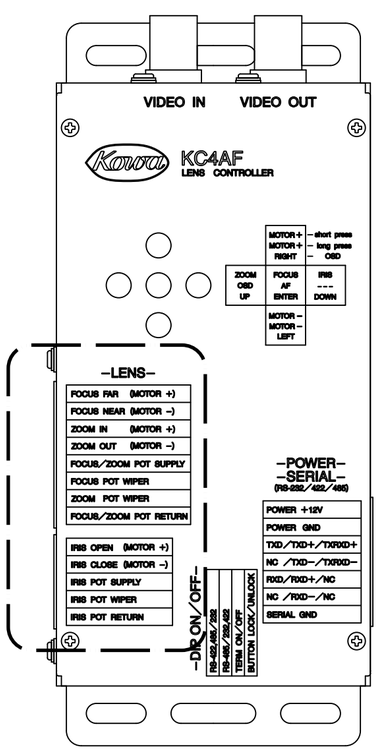

KC4AF SIDE	LMZ2200AMPDC-XF		
FOCUS FAR (MOTOR+)	(+)	BLACK	FOCUS FAR
FOCUS NEAR (MOTOR-)	(+)	GREEN	FOCUS NEAR
ZOOM IN (MOTOR+)	(+)	YELLOW	ZOOM IN
ZOOM OUT (MOTOR-)	(+)	RED	ZOOM OUT
FOCUS/ZOOM POT SUPPLY	(+)	ORANGE	POT. SUPPLY
FOCUS POT WIPER		BLUE	FOCUS WIPER
ZOOM POT WIPER		GRAY	ZOOM WIPER
FOCUS/ZOOM POT RETURN	(-)	PURPLE	POT. RETURN
IRIS OPEN (MOTOR+)	(+)	WHITE	EXT ON
IRIS CLOSE (MOTOR-)	(+)	BROWN	EXT OFF
IRIS POT SUPPLY	(+)	Light Green	POT. SUPPLY
IRIS POT WIPER		Pink	EXT WIPER
IRIS POT RETURN	(-)	Light Blue	POT. RETURN